Michelson's Interferometer

Name - Vedanta Mohapatra

Section - 1 Group - 1

Roll Number – 20CS02001

Date of experiment – 06/05/2021

Aim of the Experiment

To determine the wavelength of the given source using the phenomenon of interference based on division of amplitude.

Apparatus Required

(i) Michelson's interferometer set up.

(ii) Light source (He-Ne Laser 1.0 mW, 220 V AC)

(iii) Lens mounted, f=20 mm with holder

(iv) Optical bench and Screen

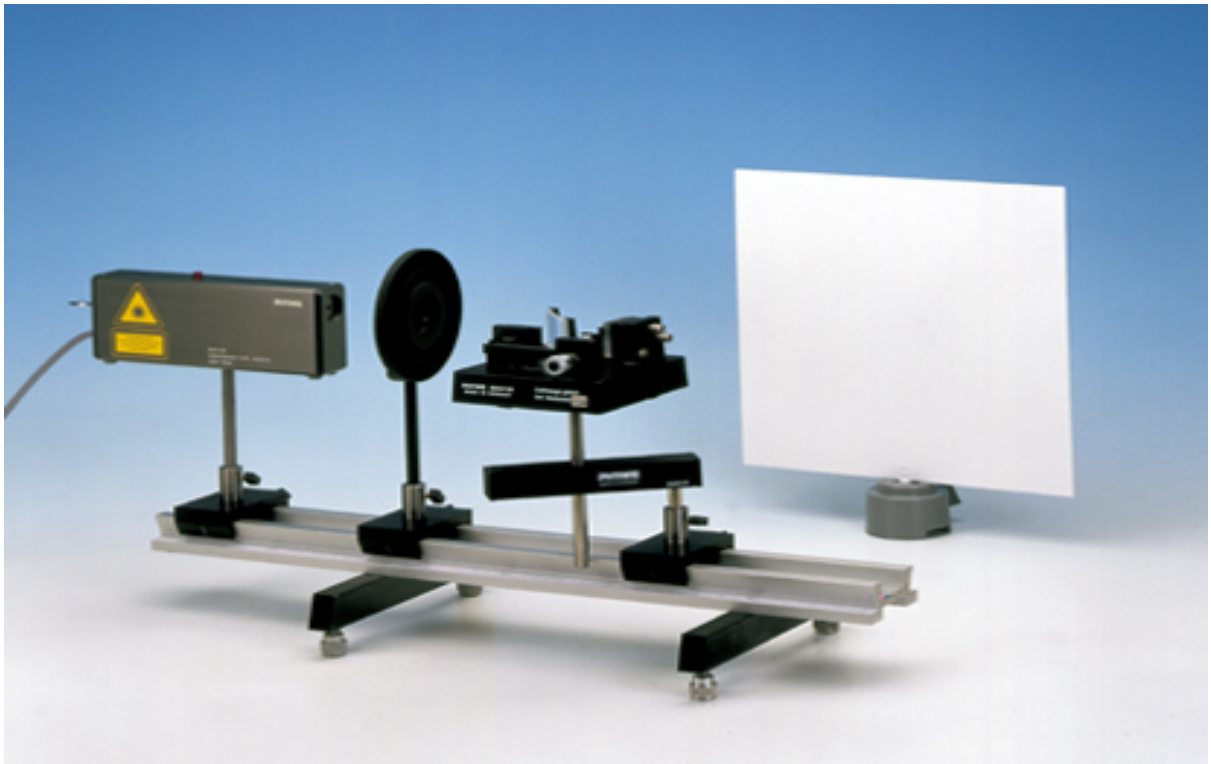

Fig-1: Experimental Set-up

Theory

When two coherent sources of light interfere with each other we get an interference pattern. As a result of this a new wave is generated with modification in the distribution of intensity through superposition. Two sources are said to be coherent if there exists a constant phase relationship in between the two sources. The interference pattern is produced in terms of point of maximum intensity (maxima) and minimum intensity (minima). In case of Michelson's interferometer interference takes place by division of amplitude. The complete experimental set up for Michelson's interferometer is shown in Fig-1.

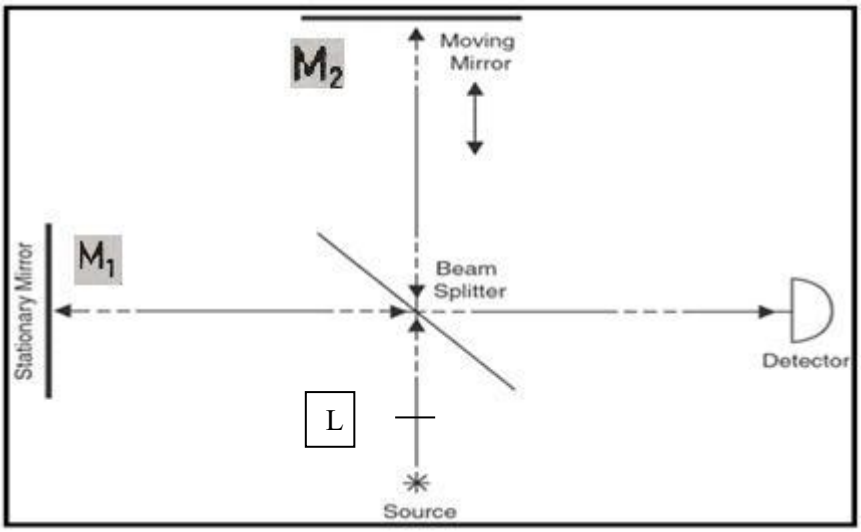

Fig-2: Schematic diagram

The schematic diagram is illustrated in Fig-2. Basically the set up consists of lens L, a half silvered glass plate, two mirrors M_1 and M_2 with the detector. Light from a monochromatic laser source after passing through the lens L falls on the half silvered glass plate called as beam splitter, which is inclined at an angle 45^0 to the path of light. Light falling on it is partly reflected towards mirror M_1 and partly transmitted towards M_2.The beam going towards M_1 is reflected back normally and is transmitted through the glass plate to fall on the detector. Similarly the light got transmitted through the glass plate is reflected back by the mirror M_2 and again strikes on glass plate to get reflected and reach the detector. The mirrors M_1 and M_2 are adjusted to get circular fringes as shown in Fig-4. The mirror M_2 is kept fixed and the mirror M_1 is moved by the micrometer screw attached to it. The number of circular fringes crossed the field of view is counted and the corresponding distance moved on linear scale is noted.

If λ= Wavelength of the laser source of light.

x = the distance through which the micrometer screw moved

n = No of fringes that crossed the centre of the field of view or the no of fringes that collapse in the centre. Then $\lambda = \frac{2x}{n}$

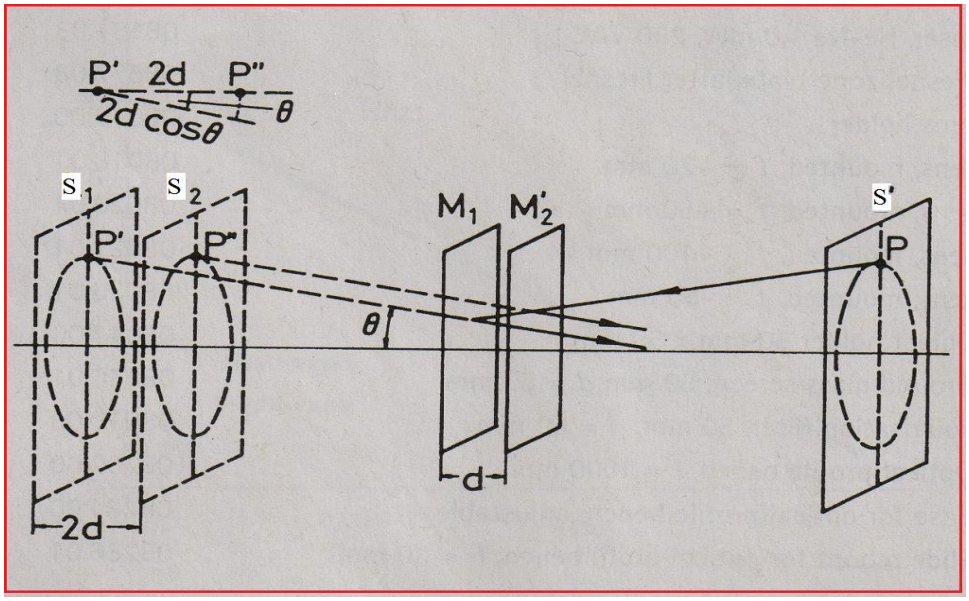

Fig-3: Schematic diagram

As shown in the Fig-3 M_2' is the image of the mirror M_2 on the glass plate and S_1, S_2 are the images of the S' on the same glass plate. We have replaced the real source S by its image S'. Here P, P' and P'' are three points on S', S_1 and S_2 respectively. If the separation between M_1 and M_2' is d then the separation between S_1 and S_2 is 2d. These two images of the sources serve as two virtual coherent sources. The rays coming from these sources $S_1$and S_2 and making an angle θ with the central line interfere with each other with a path difference 2dCosθ. Depending on the value of the path difference a particular fringe will be dark or bright.

For $2d\cos\theta = n\lambda$, we get a maxima and for $2d\cos\theta = (2n+1)\lambda/2$, we get a minima where n is the order of the bright or dark fringes and λ is the wave length of the light used.

By moving the mirror M_2 through a distance x and counting the number of bright fringes m that merge at the centre of the circular fringe pattern, the value of the wave length can be calculated .

We have $2d\cos\theta = n\lambda$ ---------- (1)

After moving the mirror through x,

$2(d+x)\cos\theta = (n+m)\lambda$---------- (2)

Subtracting eqn (1) from eqn (2) we got,

$2x\cos\theta = m\lambda$ ---------- (3)

For all the rays passing through the centre, $\theta = 0$.

So eqn (3) becomes as, $2x = m\lambda$

Or $\lambda = 2x/m$

In the present set up the actual distance moved by the mirror is 1/10th of the distance moved by the micrometer screw head. So $\lambda = 2x/10m$. From this the value of λ can be calculated.

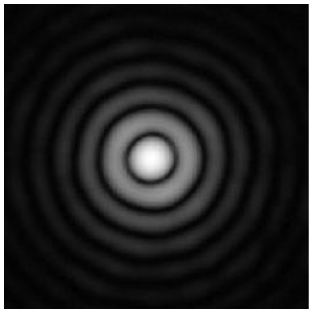

Fig-4: Interference Pattern obtained from Michelson's Interferometer

Procedure

(i) Mount the laser source and switch it on for some time so that the output light gets stabilized. Adjust the lens on the optical bench and focus the laser light on the half-silvered mirror.

(ii) The resulting two beams of light are reflected by the two mirrors and impinge on the screen. With the help of the adjusting screws provided move the positions of the two images and make them interfere to give circular fringes.

(iii) Now turn the micrometer screw to any initial position at which the centre of the circles is dark and note down the reading. Again, turn the micrometer in the same direction and the no of fringes crossed the centre of the field of view is counted.

(iv) The distance travelled on the micrometer scale is noted and from this the value of d is calculated by dividing 10 to the fringe width.

(v) Finally calculate the wavelength of the source using the given formula.

Observations

Table-1: Measurement of' x' for 50 fringes:

Sl. No.	I.C.S.R I	No of Complete rotation(n)	F.C.S.R F	Pitch	L.C.	P.S.R A=Pitch*n	Circular scale reading B=(I-F)*L.C.	Total Path diff. A+B=F	x=F/10
1	11	0	30	0.5	0.01	0	0.19	0.19	0.019
2	30	0	47	0.5	0.01	0	0.17	0.17	0.017
3	47	0	15	0.5	0.01	0	0.18	0.18	0.018
4	15	0	27	0.5	0.01	0	0.12	0.12	0.012

5	27	0	46	0.5	0.01	0	0.19	0.19	0.019
6	46	0	11	0.5	0.01	0	0.15	0.15	0.015
7	11	0	28	0.5	0.01	0	0.17	0.17	0.017
8	28	0	47	0.5	0.01	0	0.19	0.19	0.019
9	47	0	13	0.5	0.01	0	0.16	0.16	0.016
10	13	0	32	0.5	0.01	0	0.19	0.19	0.019

Where I.C.S.R = Initial circular scale reading

F.C.S.R. = Final circular scale reading

SI No.	SI No. of Wavelength	Wavelength of laser light
1	λ1	$\left(\frac{2*0.019}{50}\right) = 760nm$
2	λ2	$\left(\frac{2*0.017}{50}\right) = 680nm$
3	λ3	$\left(\frac{2*0.018}{50}\right) = 720nm$
4	λ4	$\left(\frac{2*0.012}{50}\right) = 480nm$
5	λ5	$\left(\frac{2*0.019}{50}\right) = 760nm$
6	λ6	$\left(\frac{2*0.015}{50}\right) = 600nm$
7	λ7	$\left(\frac{2*0.017}{50}\right) = 680nm$
8	λ8	$\left(\frac{2*0.019}{50}\right) = 760nm$
9	λ9	$\left(\frac{2*0.016}{50}\right) = 640nm$
10	λ10	$\left(\frac{2*0.019}{50}\right) = 760nm$

Results and calculations

<u>Calculation of Least count</u>

Here 1 M.S.D. = 1mm = 2 rotations of circular scale

1 rotation of circular scale = 0.5mm = 50 divisions

So 1 division of circular scale = 0.01mm = L.C.

Mean Value of $\lambda = \left(\frac{\sum_i^n \lambda i}{n}\right) = 684\text{nm}$

- Error Calculation

Mean Standard error =28.875 nm

Standard Deviation = 91.3114

The wave length of the laser light is = $684 \pm 28.875\ nm$

Precautions

(i) One should not look directly to LASER light because it may damage the eye.

(ii) One should carefully handle the interferorometer because slight disturbance may disturb the fringe obtained.

(iii) After finishing the experiment, the interferorometer should covered properly.

Considerations

(i) What is interference of light and what are the different ways in which light interferes?

Ans: Interference can be defined as the superposition of light coming from various close (separation of the order of wavelength) monochromatic coherent sources. Due to the wave character of light, the light may interfere constructively (constructive interference) and the amplitude/brightness of a region is greater than its surrounding regions. Or the light may interfere destructively and cause the brightness of certain regions to be low.

(ii) What is an interferometer and what is the history of Michelson's interferometer?

Ans: Interferometers are devices that extract information from interference. They are widely used in science and industry for the measurement of small displacements, refractive index changes and surface irregularities. In most interferometers, light from a single source is split into two beams that travel in different optical paths, which are then combined again to produce interference; however, under some circumstances, two incoherent sources can also be made to interfere.

Michelson's Interferometer has a long history of being used in various historically important experiments: A famous one is outlined below: It was used by Albert Michelson and Edward Morley in the famous Michelson–Morley experiment (1887) in a configuration which would have detected the earth's motion through the supposed luminiferous aether that most physicists at the time believed was the medium in which light waves propagated. The null result of that experiment essentially disproved the existence of such an aether, leading eventually to the special theory of relativity and the revolution in physics at the beginning of the twentieth century.

(iii) Name different types of interferometers and their applications?

Ans: A few are discussed in the conclusion part.

Conclusions

(i) Interference pattern due to multiple sources (virtual) is observed. Wave nature of light is confirmed. From the experimental data obtained, the wavelength of the source is found to be within reasonable bounds from the actual value.

(ii) Some limitations faced by this experiment are need of monochromatic light of suitable wavelength: for instance, the experiment would not work for normal light because of formation of multiple coloured rings which cannot be observed accurately. Also, adjusting the gap between mirrors for obtaining a clean interference pattern is very hard and requires careful work. Because it is not perfectly clear when the fringes are destroyed/created (the

exact point where the 0th and 1st fringes split/merge) while adjusting the gap, we need to take measurements for the gap for creation/destruction of multiple fringes.

(iii) Interferometer techniques have tremendous applications like measuring the wavelength of sources, determining emission and absorption spectra of atoms, finding and probing microscopic variations on surface of cells. Interferometers in general do not necessarily always use interfering visible light: a good example of these are neutron interferometer and x-ray interferometers, which help probe up to nuclear distances with precision . Interference and diffraction are two sides of the same coin. The both come into play when there are various close sources and obstructions (having dimensions of the order of the wavelength of light used). As such, they must be kept in mind when designing telescopes, interferometers, diffraction gratings, making precision measurements(such as detection of gravitational waves by LIGO) and has various other applications in modern science.